Non-contact liquid level sensor instruction manual

(Intelligent externally attached pipeline detection liquid level special series products)

XKC-Y28A-NC

Table of Contents

1st. Overview 2
2nd.Product Features 2
3rd.Product Applications 2
4th.Product parameter 3
5th.product selection 3
6th. Installation method 3
7th. Sensitivity adjustment 5
8th.Y28A wiring diagram of various models 5
9th. Product size and physical map 7
10th.Other matters needing attention 7
11th.Troubleshooting 8
12th.Product warranty terms and instructions 8
13th. Manual version 10

1st. Overview

The intelligent non-contact liquid level sensor (hereinafter referred to as the liquid level sensor) adopts advanced signal processing technology and high-speed signal processing chip, which breaks through the influence of the container wall thickness and realizes the true non-contact of the liquid level in the closed container. Contact detection. The liquid level sensor (probe) is installed on the upper and lower sides of the outer wall of the container to be tested (the high and low levels of the liquid level). The non-metallic container does not need to be opened, and the installation is simple and does not affect production. It can detect the level of various toxic substances, strong acids, strong alkalis and various liquids in high-pressure airtight containers. The liquid level sensor has no special requirements for the material of the liquid medium and container, and can be widely used.

XKC-Y28A-NO/NC/ RS485 products are specially designed for non-metallic pipes (pipe outer diameter D≤10MM), respectively, relay normally open output and relay normally closed outputand RS485 interface output.

2nd.Product Features

1. XKC-Y28A-NO/NC/RS485 sensor, suitable for non-metallic pipes (pipe outer diameter D≤10MM) without direct contact with liquid, will not be corroded by strong acids and alkalis and other corrosive liquids, and will not be affected by scale or other debris Influence, it can be completed to detect whether there is liquid inside the container or pipeline.
2. Intelligent liquid level reference adjustment and liquid level memory function, liquid level status display mode, can realize multi-point series connection.
3. The detection is accurate and stable, and the boiling water level can be detected.
4. Pure electronic circuit structure, non-mechanical working mode, stable performance and durability.
5. High stability, high sensitivity, strong anti-interference ability, free from external electromagnetic interference, special treatment for power frequency interference and common mode interference, to be compatible with all 5V, 12V, 24V power adapters on the market.
6. Strong compatibility, penetrating various non-metallic container pipes, such as plastic, glass, ceramic and other containers, suitable for liquid level detection of various curved, arc, cylindrical containers or pipes.
7. The voltage can be selected (5V, 12V, 24V), suitable for connecting various circuits and product applications。

3rd.Product Applications

The intelligent non-contact liquid level sensor uses the inductive capacitance of water to detect whether there is liquid. When there is no liquid close to the sensor, the sensor has a certain static capacitance to the ground due to the distributed capacitance on the sensor. When the liquid level slowly rises and approaches the sensor, the parasitic capacitance of the liquid will be coupled to this static capacitance, making the capacitance value of the sensor larger, and the changed capacitance signal is then input to the control IC for signal conversion. The capacitance is converted into a change of a certain electrical signal, and then a certain algorithm is used to detect and judge the degree of this change. When the change exceeds a certain threshold, it is considered that the liquid level has reached the sensing point.

4th.Product parameter

Project name	**Parameters**
Product model	XKC-Y28A-NC
Supply voltage（Vin）	5V、12V、24V
Output mode	Normally closed
electric current	13mA
The output current	DC24V/2A
Response time	500mS
Working temperature	-20~105℃
Applicable pipe diameter range	**Outer diameter of pipe D(mm)**5-10（mm）
Liquid level accuracy	±1.5mm
humidity	5%~100%
Line length	500MM（±10MM）(Bulk can be customized)
Terminal sequence	Brown (power supply positive), yellow (signal output) Blue (power negative), black (COM terminal)
Material	PC-V0 fireproof material
Waterproof performance	IP67
Safety standard certification	CE
Environmental protection certification	ROHS2.0

5th.product selection

Normally closed output interface ———————— Model: XKC-Y28A-NC (DC 5V)
Normally closed output interface ———————— Model: XKC-Y28A-NC (DC 12V)
Normally closed output interface ———————— Model: XKC-Y28A-NC (DC 24V)

6th. Installation method

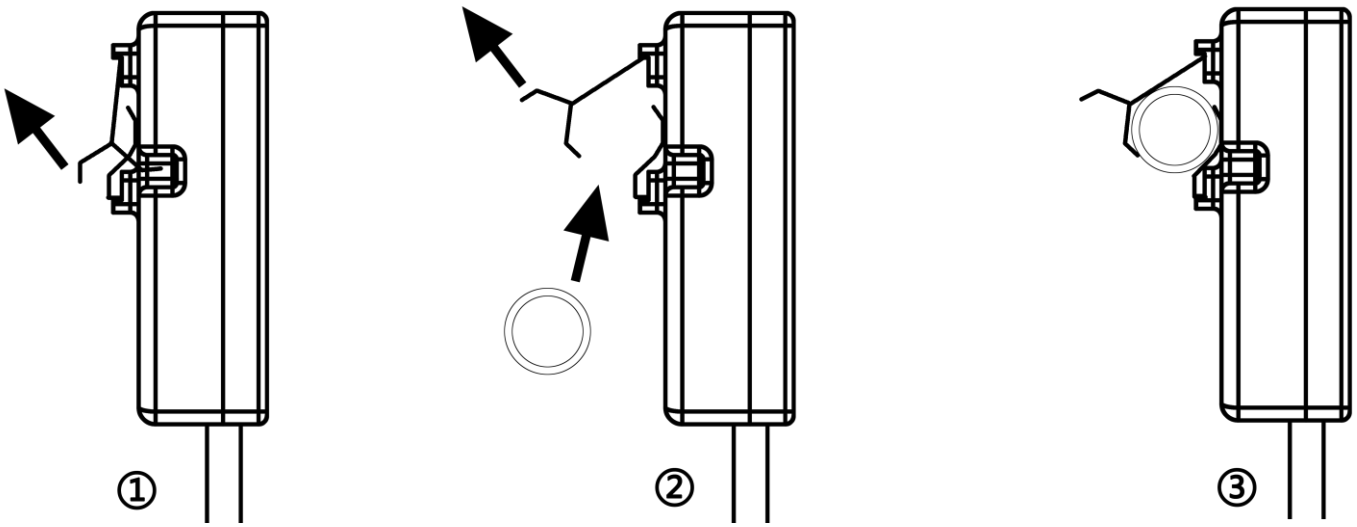

①. Pull open the shrapnel

②.Pull the shrapnel and put the water pipe between the two shrapnels

③.Just let go of the shrapnel

After installation, the effect is as follows。

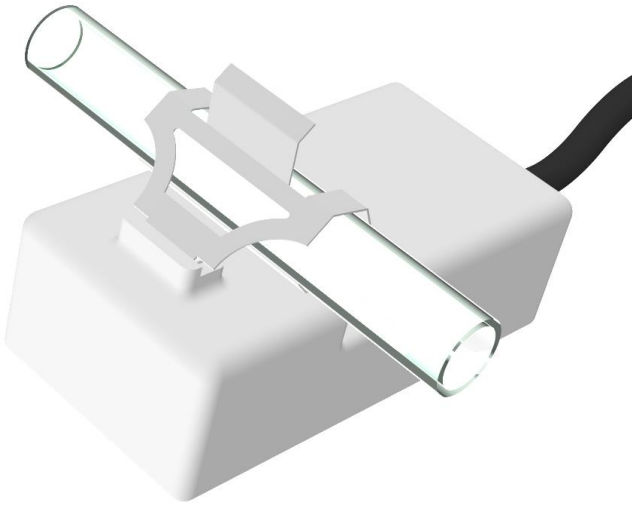

note:

1. This product is suitable for pipes with an outer diameter of 5mm ~ 10mm, and the maximum shall not exceed 11mm

2. The maximum opening angle of the spring leaf shall not exceed 60 °

7th. Sensitivity adjustment

If the non-contact liquid level sensor cannot detect or the detected liquid level deviates from the Y28A sensor, The sensitivity knob can be adjusted with a small screwdriver. Setting method:

1. Turn counterclockwise to increase sensitivity.

2. Turn clockwise to lower the sensitivity.

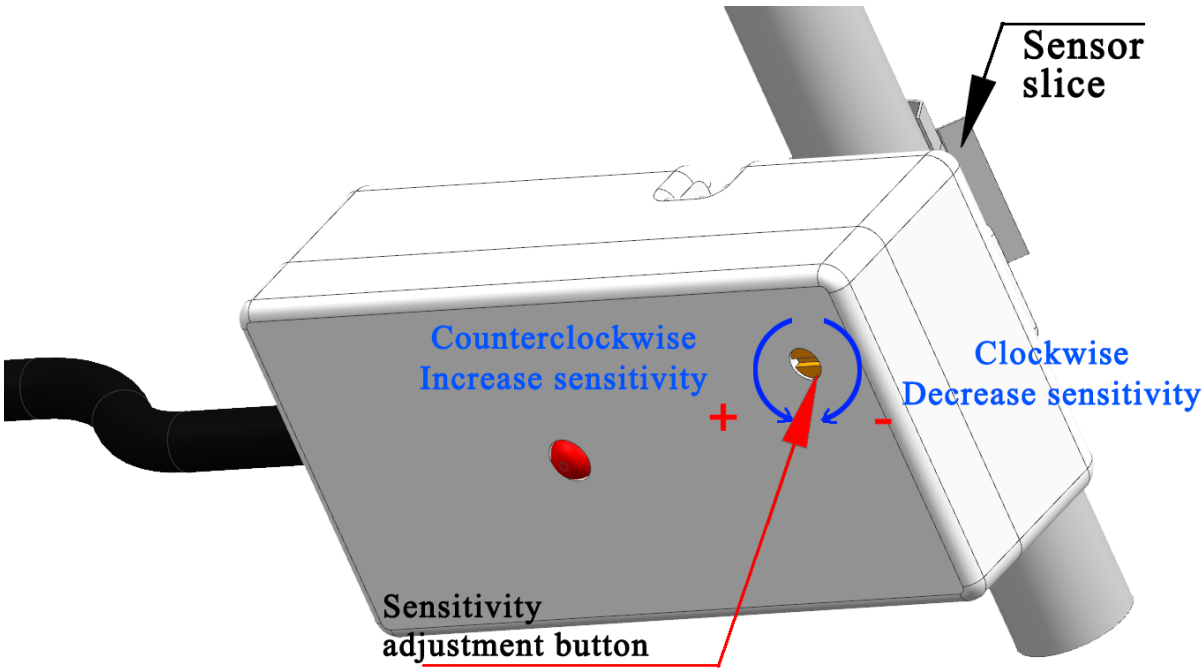

8th.Y28A wiring diagram of various models

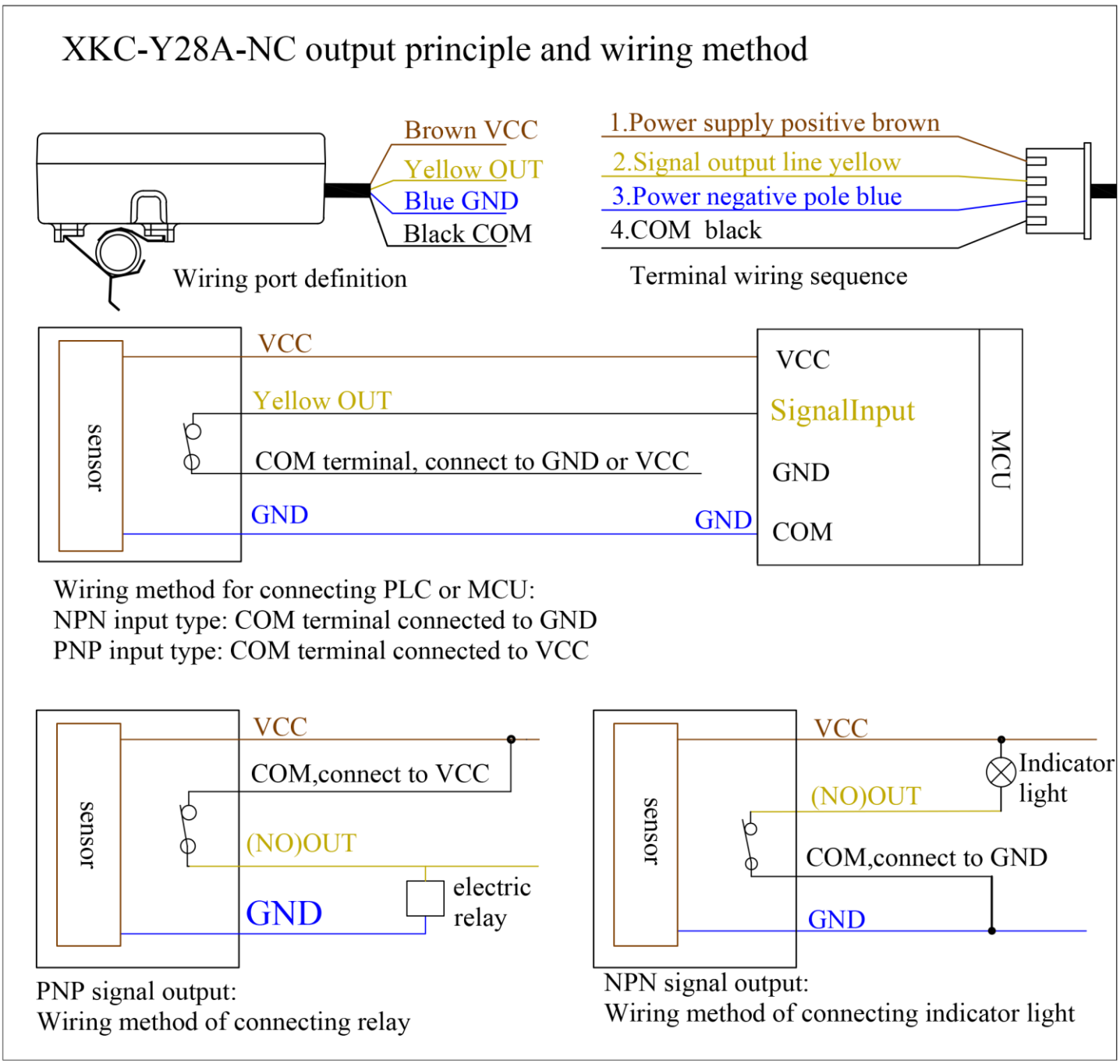

Product Applications of relay NC point output:

1. When the black wire is connected to VCC:

When liquid is sensed, the relay is closed and the relay NC point is disconnected;

When no liquid is sensed, the relay is disconnected, the NC point of the relay is turned on, and the VCC voltage is output.

2. When the black wire is connected to GND:

When liquid is sensed, the relay closes, and the relay NC point opens;

When no liquid is sensed, the relay is disconnected, the relay NC point is turned on, and the GND voltage is output.

9th. Product size and physical map

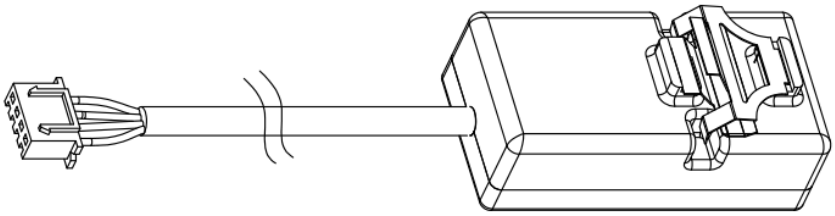

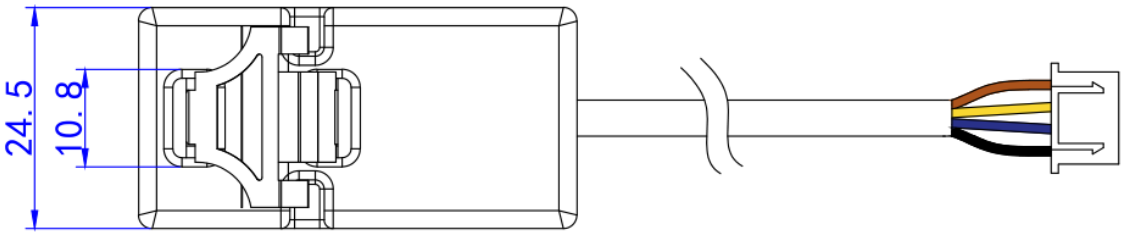

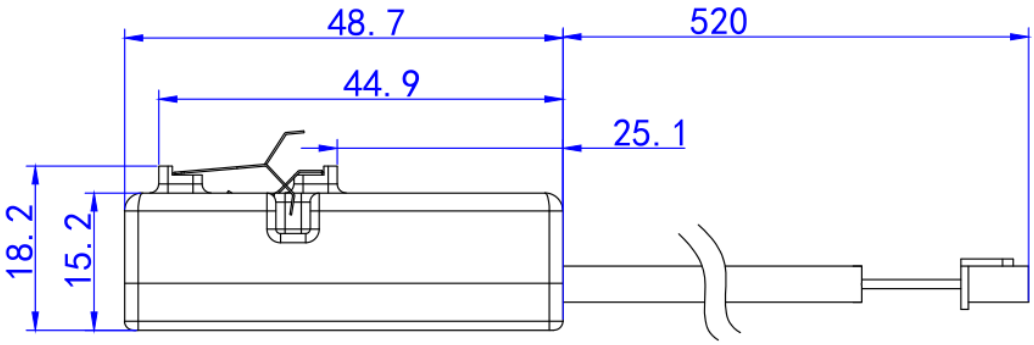

Terminal model: XH2.54-4P

10th.Other matters needing attention

(1) The viscosity of the measured liquid medium
When the dynamic viscosity is less than 10mPaS, it is measured normally. 10mPaS<dynamic viscosity<30mPaS may affect the detection. When the dynamic viscosity is greater than 30mPaS, it cannot be measured because a large amount of liquid adheres to the container wall.
(2) Note: As the temperature increases, the viscosity decreases, and most high-viscosity liquids are more affected by temperature. Therefore, pay attention to the influence of liquid temperature when measuring viscous liquids.
(3) Pay attention to keeping the sensor clean, try to prevent corrosion and avoid violent collisions and blows from other objects.
(4) During outdoor installation, avoid direct sunlight and rainwater directly flowing to the main body of the sensor, and keep away from high heat sources and pay attention to ventilation. If the ambient temperature exceeds the rated temperature, corresponding cooling protection measures should be taken.
(5) When the ambient temperature is lower than the normal operating temperature range of the sensor, an instrument protection box or other protective rain cap devices can be used for antifreeze protection, and pay attention to keeping the sensor dry. The sensor should be regularly maintained and inspected. (The detection time interval is determined by the use unit according to the specific situation).

11th.Troubleshooting

Fault status	Analyze the reasons	Problem solving measures
After the liquid level sensor is energized, there is no response (the indicator light does not light when the water level reaches the sensing point, and the sensitivity adjustment has no response)	①The power cord is not connected	Check and connect the power
	② The positive and negative ends of the power cord are reversed	Correct wiring
	③The power module is damaged	Replace the circuit board where the power module is located
	④Sensitivity is too low	Adjust the sensitivity to the appropriate gear
The indicator light keeps on	①Sensitivity grade is too high	Adjust the sensitivity to the appropriate grade
	② The initialization parameters are abnormally modified	Return to the factory to reinitialize
	③The sensor has debris or other metal parts close to it	Clean up debris and keep a certain distance from metal parts

12th.Product warranty terms and instructions

(A) .Warranty service

1. Warranty period maintenance: from the date of purchase, the product host has a one-year free warranty. The company has the right to decide to repair or replace the faulty part. If it is replaced, the replacement part may be a new device or a repair product of the same category, function, and quality. The replaced faulty part belongs to the company; the product Resale and repair do not affect the warranty period. Products that have been repaired or replaced continue to enjoy the original remaining warranty period service. If the warranty period is less than three months after the repair, the repaired or replaced part shall be shipped from the date of delivery Warranty for three months; all products of the company are guaranteed for repair.

2. Loss upon arrival (DOA) replacement: From the day of purchase, you can enjoy a free replacement service within 7

days. Products with the following problems are defined as DOA equipment: the packing and packing list do not match after the first unpacking of the product; some or all of the components cannot be used normally after the first unpacking of the product (surface scratches or other things that do not affect the function of the device) Defects are not included); other hardware failures identified by our company's engineers remotely or locally.

(B). Applicable limitations of warranty

For the following situations, the company does not assume warranty responsibility:

1. The product is out of warranty; the surface of the product is fragile and damaged; the appearance of the product is seriously damaged, installation/use in abnormal environment, unauthorized disassembly and repair/modification, external power supply damage and other abnormal damage;

2. Damage caused by incorrect installation and use of the product by the user not following the requirements of the manual;

3. Damage caused by natural disasters and human negligence (fire, lightning, flooding, impact, etc.).

(C) .Accessories and consumables are not covered by the warranty.

(D) .Non-free warranty service

Within two years of product purchase, for non-warranty product (including components) failures and damages, you can choose paid maintenance services (free labor costs), and we will charge the transportation cost of repairing parts and accessories according to the actual situation.

(E). Ways to obtain warranty service

It is recommended that you contact the dealer who purchased this product to obtain the warranty service. For the warranty, please present a valid warranty card (the dealer's stamp is required to take effect) or the purchase invoice/receipt: if you can't show it, the product's free warranty period 12 months from the product shipment date, and the latest DOA application deadline is 7 days from the product shipment date.

(F). Statement

1. The copyright of this manual belongs to Shenzhen Xingkechuang Technology Co., Ltd. (Xingkechuang) and its authorized licensors. Shenzhen Xingkechuang Technology Co., Ltd. (Xingkechuang) reserves all rights.

2. Without the written permission of the company, no unit or individual may excerpt or copy part or all of the contents of this manual, and shall not spread it in any form.

3. The customer recognizes that the purpose of the design and production of the company's products does not involve use in products related to life support or other systems or products used in other dangerous activities or environments. Personal injury or death, property or environmental damage due to product failure (collectively referred to as high-risk activities). The company's products are artificially used in high-risk activities, and the company does not guarantee it and is not liable to customers or third parties.

4. Due to product version upgrades or other reasons, the contents of this manual may change. Xingkechuang reserves the right to modify the contents of this manual without any notice or prompt. This manual is only used as a guide. Xingkechuang makes every effort to provide accurate information in this manual. However, Xingkechuang does not guarantee that the contents of the manual are completely free of errors. All statements, information and suggestions in this manual do not constitute any express or Implied guarantee.

5. Not all models are available in all countries/regions

Please keep this manual properly. Before using the product, please read this manual carefully. When using the product,

please be sure to operate in accordance with this manual. The company is not responsible for injuries and accidents caused by operations that do not follow this manual.

(G).Environmental protection This product meets the design requirements for environmental protection.The storage, use and disposal should comply with relevant national laws and regulations.Seek to proceed.

13th. Manual version

Version	Release date
V16	September 28, 2020